BUSCH
Vacuum Pumps and Systems

Installation and Maintenance Instructions

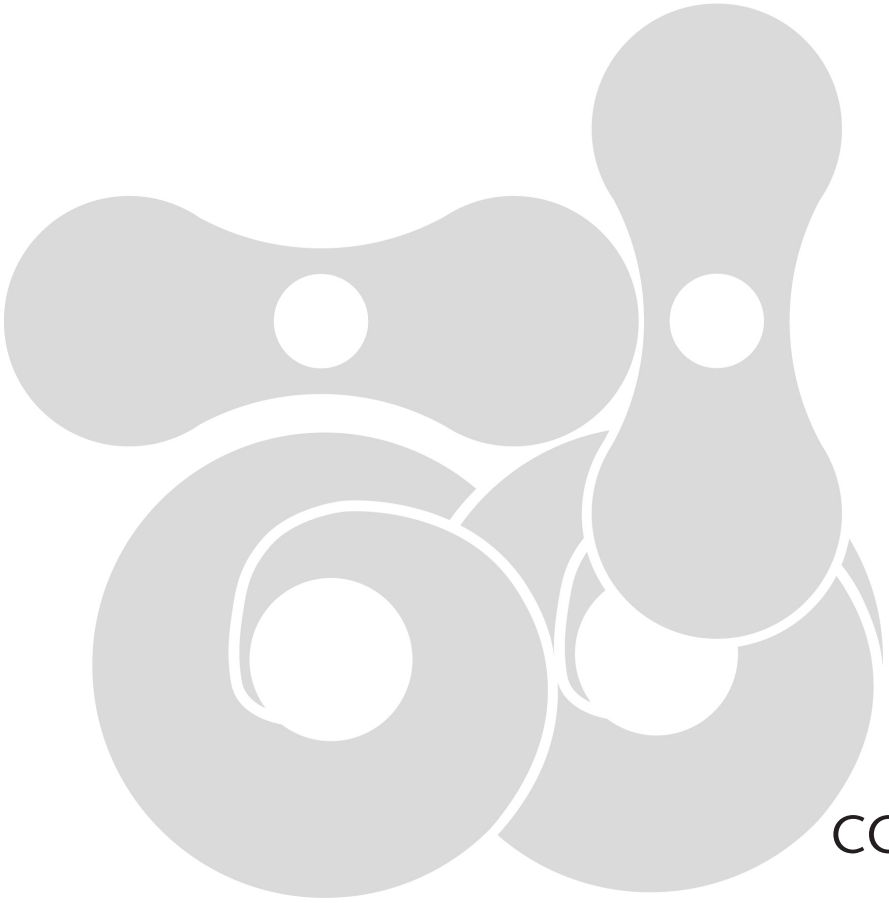

premium efficiency

Combi Screw and Roots Vacuum Pumps

COBRA BC 1000 F PE

Standard version

CE

Busch Manufacturing Korea, Ltd.
189-51, Soicheon-ro, Majang-myun
Icheon-si, Gyunggi-do, 467-813
Republic of Korea

0870771770 / 170906 / Original instructions / Subject to change without notice

Table of contents

Preface **2**
COBRA BC 1000 F PE 3
Product description **5**
Use 5
Operating principle 5
COMBI 5
Principle of DP vacuum pumps 6
Principle of MB vacuum pumps 6
Gas flow checks 6
Oil circuit 6
Cooling 6
Nitrogen system 6
Optional functions/ Use of available accessories 6
On/ Off switch 6
Versions 6
Safety **7**
Intended use 7
Safety information 7
Safety stickers 7
COBRA NW 0100 E 7
COBRA WY 0701 B 7
BC 1000 F PE 7
Noise emission 8
Safety area 8
Electrical safety 8
Types of Electrical Work 8
Type 1 8
Type 2 8
Type 3 8
Type 4 8
Lock Out/ Tag Out procedure (Type 1 of electrical work) . . . 8
Emergency off circuit description 8
Installation of the vacuum pump in a seismic zone 8
Information over the lubricants 8
Oil 8
Decommissioning procedure 8
Transport **9**
Transport in packed state 9
Transport in unpacked state 9
Storage **9**
Temporary storage 9
Removal of the pump 9
Preservation 9
Start-up of the vacuum pump after storage: 9
Installation and Commissioning **10**
Installation prerequisites 10
Local installation 10
Inlet connection 10
Discharge connection 11
Cooling water connection 11
Nitrogen connection 11
Electrical connection/ Checks 11
Installation 11
Mounting 11
Dimensional drawing BC 1000 F PE 11
Electrical connection 12
Power wiring connection 12
Power connector on vacuum pump front side 12
Equipment connections (with options) 12
Connection of the lines/ pipes 12
Oil filling 12
Oil filling on vacuum pump NW 0100 E 13
Oil filling on vacuum pump WY 0701 B 13
Checking the direct cooling 13
Saving the operating parameters 13
Recommendations on operation 13
Application 13
Switching the vacuum pump on/ off 14
First start-up of the system 14
Switching the system off 14
Maintenance **14**
Maintenance program 15
Weekly: 15
Monthly: 15
Yearly: 15
Every 16 000 hours of operation, at the latest after 4 years: . 15
Lock Out/ Tag Out procedure 15
Safety Lockout procedure 16
Checking the oil 16
Checking the oil level 16
Refilling oil 16
Checking the colour of the oil 16
Oil change 16
Draining used oil 16
Filling in new oil 17
Checking the cooling water 17
Checking the cooling water flow 17
Checking the nitrogen 17
Checking the nitrogen flow 17
Checking the current consumption 17
Checking the silencer (accessory) 17
Checking the leak-protection non-return valve (accessory) . . . 17
Overhaul **17**
Removal from service **17**
Temporary removal from service 17
Recommissioning 17
Dismantling and Disposal of the vacuum pump 18
Oil type/ quantity **19**
Oil type 19
Oil quantity 19
Technical data **20**
EU-Declaration of Conformity **21**

Preface

Congratulations on your purchase of the Busch vacuum pump. With watchful observation of the field's requirements, innovation and steady development Busch delivers modern vacuum and pressure solutions worldwide.

These operating instructions contain information for

- product description,
- safety,
- transport,
- storage,
- installation and commissioning
- maintenance,
- overhaul and
- troubleshooting

of the vacuum pump.

For the purpose of these instructions, "handling" the vacuum pump means the transport, storage, installation, commissioning, influence on operating conditions, maintenance, troubleshooting and overhaul of the vacuum pump.

Prior to handling the vacuum pump these operating instructions shall be read and understood. If anything remains to be clarified please contact your Busch representative.

Keep these operating instructions and, if applicable, other pertinent operating instructions available on site.

COBRA BC 1000 F PE

IN Inlet connection
OUT Discharge connection
OSG Oil sight glass
CWC Cooling water connections
NC Nitrogen connections
CP PLC box
EB Eye bolts
CPC PLC connection
ES Emergency stop button (EMO)
MB On/ off switch/ Main circuit breaker
ECP Earthing connection M8
CAO Extracting ventilator
RF Ventilator
EC Electrical connections
RC LCD
PRV Nitrogen pressure reducer

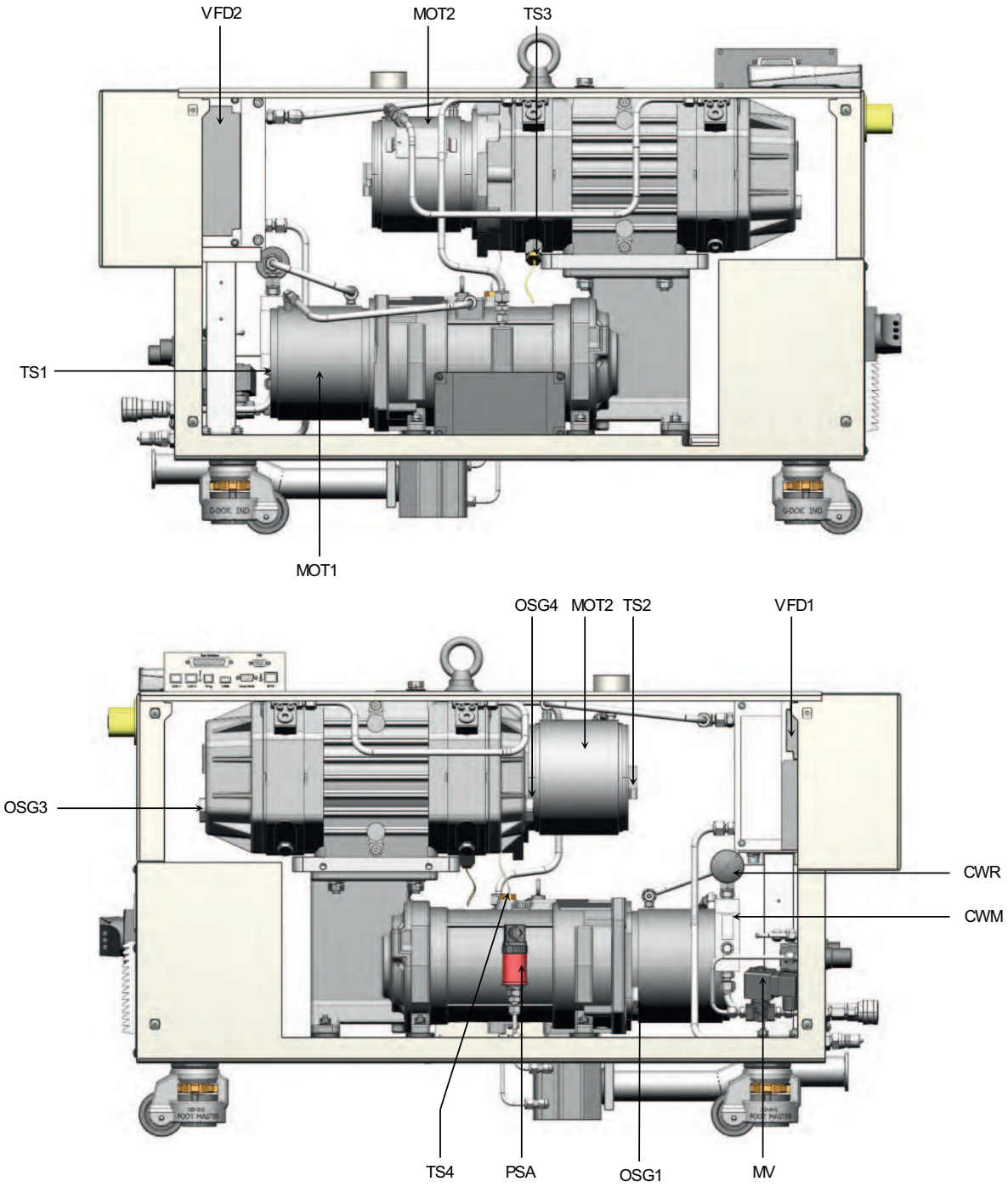
VFD2
MOT2
TS3
TS1
MOT1
OSG4
MOT2
TS2
VFD1
OSG3
CWR
CWM
TS4
PSA
OSG1
MV

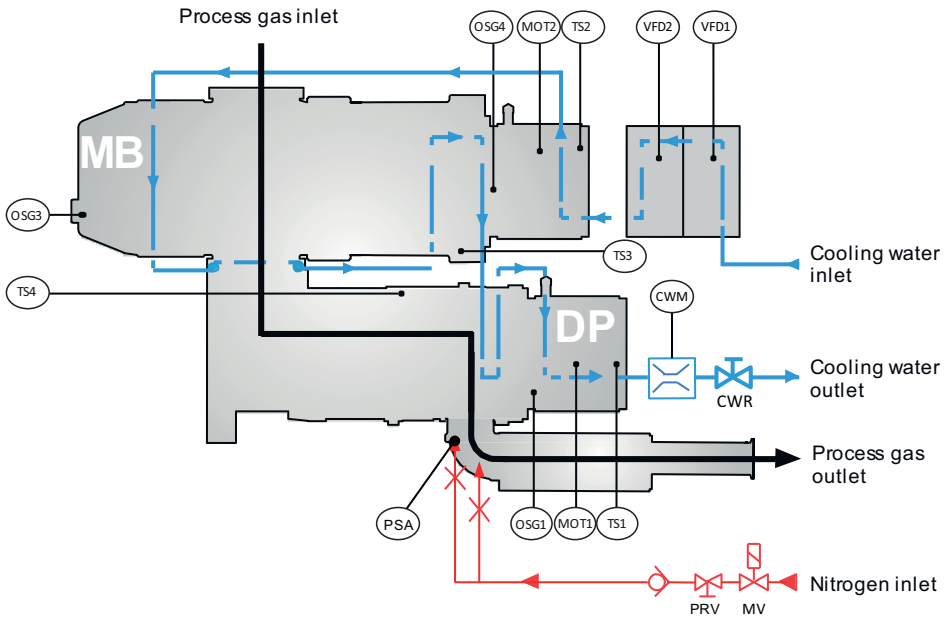

PRV Nitrogen pressure reducer
PSA Pressure sensor
TS 3 Oil temperature sensor (MB) (klixon)
TS 4 Sensor PT100
OSG 1 Oil level indicator (DP)
OSG 3 Oil level indicator (MB)
OSG 4 Oil level indicator (MB)
OFP Oil fill plug
ODP Oil drain plug
MOT 1 Motor (DP)
MOT 2 Motor (MB)
CWM Cooling water flow meter
VFD 1 Frequency inverter (DP)
VFD 2 Frequency inverter (MB)
CWR Cooling water regulating valve
MV Nitrogen solenoid valve, dilution gas
TS 1 Klixon (DP)
TS 2 Klixon (MB)

DP

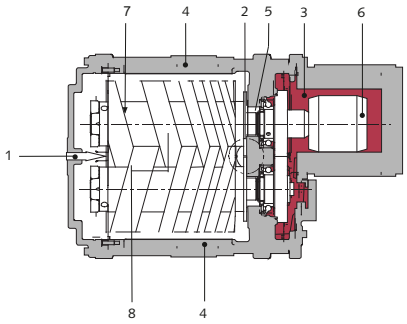

MB

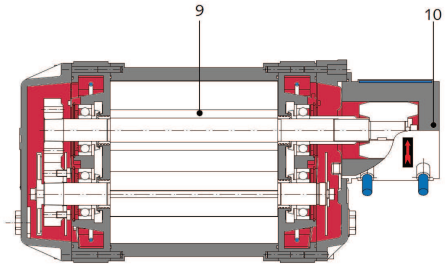

1 Inlet
2 Outlet
3 Oil
4 Cooling water
5 Barrier gas
6 Motor klixon DP
7 Intake medium
8 Screw rotors
9 Roots lobe
10 Motor klixon MB

Product description

Use

The COBRA BC vacuum pumps are designed for use in the field of microelectronics and similar industries.

They can be used to suck gases and gas mixtures.

WARNING

When using toxic, inflammable and/ or explosive gases, make sure that the system corresponds in design to applicable local and national safety regulations and that all applicable safety measures are followed.
All product-specific safety regulations must be observed.

Solid particles must not get into the vacuum pump. Procedural errors can result in the pump sucking in a certain quantity of liquid. If the pump has sucked in liquid, a short drying time is necessary at the end of the procedure.

The allowed maximum inlet gas temperature depends on the inlet pressure and the type of gas: the lower the inlet pressure (Pa), the higher the drawn gas temperature (TGas) can be.

The following indicative values for air can be considered:

– Pa > 50 mbar, TGas < 80°C

– Pa < 50 mbar, TGas < 200°C

The vacuum pump is intended for use in a potentially non-explosive environment.

As far as temperature is concerned, the pump is suitable for continuous duty at any pressure between atmosphere and ultimate pressure.

The vacuum pump is tight down to ultimate pressure.

Operating principle

COMBI

The COBRA BC 1000 F PE pumps are a combination of a screw vacuum pump NW 0100 E (DP) and a Roots vacuum pump WY 0701 B (MB)

The COBRA BC 1000 F PE vacuum pumps are COBRA NW screw vacuum pumps with cooling water and nitrogen circuits.

The COBRA NS screw vacuum pumps are driven by water-cooled motors.

Principle of DP vacuum pumps

The COBRA NS screw vacuum pumps work by the principle of spiral pumps. Two parallel screws (8) rotate in opposite directions in the pump body. Entering gases are trapped between the flights of the screws and the pump body. The gases are conveyed by the rotation of the screws to the exhaust, where they are discharged.

Principle of MB vacuum pumps

The Roots vacuum pumps operate according to the approved principle of the Roots type machine. Operation is both simple and effective. Two lobes (9) with identical profiles rotate in opposition directions within a casing. As they rotate, gas is drawn into the space between each lobe and the casing where it is trapped and by the rotation pushed out into the discharge. This action is repeated twice for each revolution of each lobe and therefore four times for each revolution of the drive shaft. There is no mechanical contact between lobes and cylinder. So no oil lubrication is required.
The drive motor of roots pump is a water cooled canned motor.

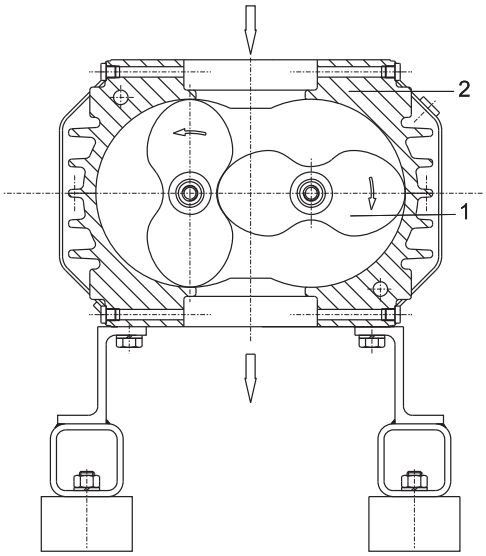

Gas flow checks

A pressure sensor PSA at the discharge monitors the discharge pressure. If the pressure reaches more than the limit value (alarm, preset at the factory: 0.2 bar), the purge cycle starts.

Oil circuit

Since the complete operating principle works without contact, no oil circuit is needed in the work area.

Cooling

The vacuum pump is cooled by

- a direct cooling water circuit in the motors and the DP and MB transmission casing. The flow regulating valve CWR of cooling water is preset on 3-4 l/min at the factory. The water cools in the DP and MB pumps motors, the two frequency inverters (VFD 1, VFD 2) and the drive/ pump transmission DP system.
- a direct cooling water circuit in the rear bearing (for exceptionally cool running in option).

NOTE: The COBRA BC 1000 F PE vacuum pumps are principally dispatched without oil already in the vacuum pump but, without cooling water. Before vacuum pump first startup, control the oil level and the cooling liquid level. In the event of absence of one or the other of these lubricants, please carry out the filling (please refer to the various chapters of filling). Do not forget to connect the cooling water supply before the first startup. Operation without these coolants can result in damage to the vacuum pump.

Nitrogen system

The nitrogen system can be used in a number of different ways :

- nitrogen is used as sealing gas. The nitrogen is injected between the transmission and the process gas to achieve good closeness. The Nitrogen flow used for the sealing is set by two chips (ϕ). With a pressure of 4,0 bar, the flow is around 25 l/min.
- nitrogen is used as purge gas. The purge eliminates traces of gases remaining in the vacuum pump. The vacuum pump purge cycle is programmed in the control and starts, either after a STOP operation or after an alarm function.
  For a correct purge execution, the shut-off valve at the inlet flange must be closed. The purge cycle lasts about 30 min.
  (Programmable time in the basic parameters).

Optional functions/ Use of available accessories

A pressure sensor (PSA) mounted at the exhaust , controls the overpressure at the exhaust. If overpressure is above 0,3 bar, pressure sensor gives a warning then an alarm signal. Status of the pump depends on the alarm function set by user (factory setting : None, pump continues running with an alarm).

A temperature sensor PT100 (TS 4) mounted on the cylinder, measures the temperature inside the cylinder (DP).

A silencer or sound absorber (accessory) at the exhaust reduces the noise of the pump and collects any condensate.

A leak-protection non-return valve (optional) at the exhaust traps the condensate in the pump when the pump is switched off.

The LCD controller processes the data of the sensors as follows:

- PSA: exhaust pressure
- TS 4: temperature inside the cylinder DP
- MOT 1 and MOT 2: DP and MB current and speed
- DGF: nitrogen flow rate, dilution
- CWM: cooling water flow rate in motors/ transmission/ frequency inverters

See "Installation and Maintenance Instructions, Busch PLC and Busch LCD (No. 0870758077)".

On/ Off switch

The vacuum pump is delivered with a circuit breaker. The function start/ stop can be done in Local by using the LCD controller or in Remote by the production machine.

Versions

Further vacuum pump descriptions state the nominal displacement and the design level.

Example: BC 1000 F PE
BC = standard version
1000 = 1000 m^3/h
F PE= Design

Safety

Intended use

DEFINITION: For the purpose of correct understanding, the "handling" of the vacuum pump implies the transport, storage, installation, commissioning, the influence on operating conditions, maintenance, troubleshooting and overhaul of the vacuum pump.

The vacuum pump is intended for industrial use. It should only be handled by qualified staff.

The different applications for use and operational limits of the vacuum pump as laid out in the "Product Description" and the "Installation Prerequisites" of the vacuum pump must be observed both by the manufacturer of the machinery into which the vacuum pump is to be incorporated and by the end user.

The need for personal safety regulations depends mainly on the application the pump will be used in. The end user must provide the operators with all necessary means and tools and must inform his personnel about any dangers emanating from the processed products.

The operator of the vacuum pump must observe the safety regulations and must train and instruct his personnel accordingly.

Local regulations regarding the motors and electric control elements must be observed when installing the pump in potentially explosive environments.

The maintenance instructions must be observed and respected.

It is vital that these installation and maintenance instructions are read and understood before the vacuum pump is used. If you have any doubts, please contact your local Busch representative.

Safety information

The vacuum pump has been designed and manufactured in accordance with the latest technical and safety standards. Nevertheless, residual risks may remain.

A lot of safety information is mentioned in these Installation and Operating Instructions as well as on the pump. The safety instructions must be observed. The safety information can quickly be detected through key words like DANGER, WARNING and CAUTION and is defined as follows:

DANGER

Disregard of this safety note will always lead to accidents with potentially fatal injuries and serious damages.

WARNING

Disregard of this safety note may lead to accidents with potentially fatal injuries and serious damages.

CAUTION

Disregard of this safety note will always lead to accidents with minor injuries and damages to property.

Safety stickers

COBRA NW 0100 E

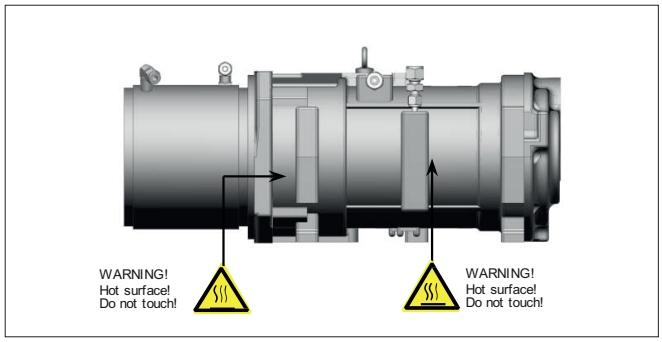

COBRA WY 0701 B

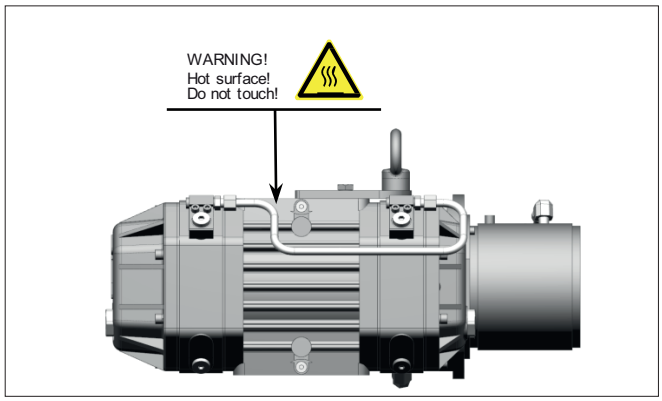

BC 1000 F PE

Noise emission

Refer to the table “Technical data” for the permissible noise leveling free field conditions according to EN ISO 2151.

CAUTION

The sound level of the vacuum pump within a certain perimeter of the pump is high.

Risk of hearing damage.

Users who are spending a longer period of time in the vicinity of a non-insulated vacuum pump must wear suitable ear protection.

Safety area

Before any maintenance action, ensure a safety perimeter of a least 610 [mm] around the pump.

Electrical safety

Types of Electrical Work

The following are the four types of electrical work defined by the SEMI S2, latest version, guideline:

Type 1

Equipment is fully deenergized.

Type 2

Equipment is energized. Energized circuits are covered or insulated.

NOTE : Type 2 work includes tasks where the energized circuits are or can be measured by placing probes through suitable openings in the covers or insulators.

Type 3

Equipment is energized. Energized circuits are exposed and inadvertent contact with uninsulated energized parts is possible. Potential exposures are no greater than 30 volts rms, 42.4 volts peak, 60 volts dc or 240 volt-amp in dry locations.

Type 4

Equipment is energized. Energized circuits are exposed and inadvertent contact with uninsulated energized parts is possible. Potential exposures are greater than 30 volts rms, 42.4 volts peak, 60 volts dc, or 240 volt-amp in dry locations. Potential exposures to radio-frequency currents, whether induced or via contact, exceed the limits in Table A5-1 of Appendix 5 (SEMI S2 guideline).

Lock Out/ Tag Out procedure (Type 1 of electrical work)

- Stop the pump with the LCD controller (press on STOP button during 10s)
- Press on emergency stop button
- Switch off the main circuit breaker
- Switch off the customer’s power supply
- Switch off the water and nitrogen quick connections (inlet first, then outlet)
- Put the label or warning board “Maintenance processing” on or next to the pump

Emergency off circuit description

- The Emergency off circuit may be opened by pressing on emergency stop button. If this element occurs, then the DP and MB pumps will immediately stop. The PLC will remain energized to save the pump status.
- If the emergency stop button was pressed, check the start up of the pump then release this button to restart the pump. Press on Start button on the LCD controller, the pump will restart.

Installation of the vacuum pump in a seismic zone

Upon receipt, the vacuum pump is fixed on the transport pallet with two brackets.

- Convey the pump to its final location with a pallet truck before removing it from its support
- Unscrew the fixing screws of the pump on the transport pallet and remove the machine from its support with an appropriate lifting system by using the lifting brackets made for this purpose

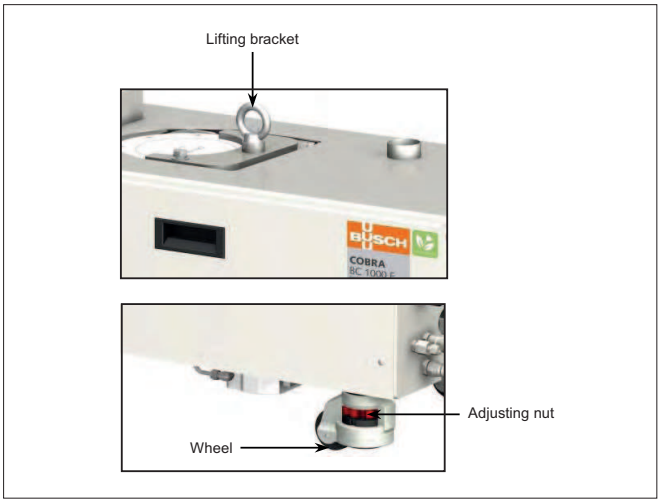

- The pump must not lay only on the brackets. Unscrew the four adjusting nuts until the machine legs touch the ground
- Check that the wheels no longer touch the ground

CAUTION

The vacuum pump is fixed to the ground with four M10 screws, two screws per bracket. The fixing screw must stand a 1200 N tensile force (per bracket).
The final user must adapt the type of screws depending on the ground material.

Information over the lubricants

Oil

Busch YLC 250 B, Art. No. 0831 000 054 (0,5 l ≅ 1 kg)

Quantity BC 1000 F PE:

- WY 0701 B - MB: 1,4 l
- NW 0100 E - DP: 0,12 l

Replacement: After 5000 h (see Maintenance program)

Technical data sheet: Please refer to chapter "Oil type/ Quantity".

Decommissioning procedure

When the product arrives at the end of the lifetime, it is necessary to proceed to the decontamination of the vacuum pump

CAUTION

Only authorized personnel may carry out any dismantling on the vacuum pump. Before work begins, the operator of the vacuum pump must fill in a form or a “Declaration Regarding Contamination of Vacuum Equipment and Components” that provides information on possible dangers and appropriate measures.
If this form has not been filled in completely and signed by a responsible person, the vacuum pump may not be dismantled.

- Proceed to disassembly of the vacuum pump. Please make sure to wear a personal protective equipment (PPE) prior to any intervention on the vacuum pump. Some residue may remain inside.
- Proceed to decommissioning of the different parts according to the current local and national laws

Transport

The COBRA BC vacuum pumps are tested and checked in our factory before careful packing. Check the packaging for transport damage when the goods arrive. The pump can withstand temperatures between -25°C and +55°C during transport.

Transport in packed state

Packed on a pallet, the vacuum pump can be moved with a hand forklift truck.

Transport in unpacked state

The vacuum pump is fastened to the pallet with fixing pins:

◆ Unscrew the fastening nuts underneath the pallet.

CAUTION

Do not work, walk or stand under suspended loads.

CAUTION

Please check out the weight of the vacuum pump before lifting it up (see "Technical Data").

Use adequate lifting gear for this.

NOTE: The eyebolts are fitted more or less at equal distance from the centre of gravity of the vacuum pump incl. drive motor. If any accessories that could upset the balance of the vacuum pump, are installed, or if the vacuum pump is delivered without drive motor, it is necessary to add a belt or rope at a suitable point when lifting the pump.

- Attach lifting gear securely to the eyebolt or eyebolts
- Use lifting gear with a crane hook equipped with safety latch.
- Lift the vacuum pump

In case the vacuum pump was bolted to a pallet with fixing bolts: Unscrew the fixing bolts in the base frame.

CAUTION

In case of a vacuum pump filled with oil, make sure that by lifting the inclination angle of the vacuum pump do not exceed 5° from the horizontal . In case of too high inclination (>5°), risk of oil leak within the work area

Make sure before every transport using the appropriate lifting mean that the inclination of the vacuum pump is less than 5°.

The packaging material must be disposed of in accordance with local and national regulations.

This handbook is contained in the delivery package.

Storage

Temporary storage

- Make sure that the intake and exhaust flanges are closed (put on the protective caps included in the delivery package of the vacuum pump)
- Store the vacuum pump

– if possible, the vacuum pump should be stored in its original packaging,
– indoors,
– dry,
– in a dust-free and vibration-free room

Removal of the pump

Before starting a vacuum pump that has been stored outside the building for a while, the vacuum pump must be moved to a room with ambient temperature, where it should rest for a day.

Preservation

If the vacuum pump will be exposed to unfavourable ambient conditions (for example, aggressive environment, frequent temperature changes), begin immediately with preservation work on the vacuum pump.
In the case of favourable ambient conditions, perform preservation work on the vacuum pump if a storage period of more than three months are planned.

- Make sure that all openings are hermetically sealed; use adhesive tape to fasten loose parts (seal rings, flat seals, etc.).

NOTE: VCI is the abbreviation for “volatile corrosion inhibitor”. The VCI molecule is an organic corrosion inhibitor in the vapour phase. Integrated in various carriers such as film, cardboard, paper, foam, liquid and powder, it protects the parts against corrosion as a result of its action in the vapour phase. However, VCI packaging can attack synthetic surfaces and surfaces of other elastomers. If in doubt, please contact your nearest distributor. VCI packaging provides several years of protection against corrosion, even under the harshest of conditions: overseas shipment, extended storage before use.

- Wrap the vacuum pump in a VCI film
- Store the vacuum pump

– if possible, the vacuum pump should be stored in its original packaging,
– indoors,
– dry,
– in a dust-free and
– vibration-free room

Start-up of the vacuum pump after storage:

- Make sure that all protective elements, stoppers or adhesive tapes attached before preservation have been removed
- Switch on the vacuum pump in the sequence described in the chapter “Installation and Commissioning”

Installation and Commissioning

Installation prerequisites

CAUTION

In case of non-compliance with the installation prerequisites, particularly in case of insufficient cooling:

Risk of damage or destruction of the vacuum pump and its components!

Risk of personal injury!

The installation prerequisites must be complied with.

- Please ensure that the integration of the vacuum pump is compliant with the safety requirements of the Machine Directive 2006/42/EC (concerning the responsibility of the system's manufacturer into which the vacuum pump is to be incorporated, please also refer to the note in the EC-Declaration of Conformity).

WARNING

Local regulations regarding the motors and electric control elements must be observed when installing the pump in potentially explosive environments. Make sure before start-up that all safety measures have been followed.

Local installation

- Make sure that the environment of the vacuum pump is not potentially explosive
- Make sure that the following ambient conditions are fulfilled:

– Ambient temperature: 0 ... 40 °C (32 ... 104 °F)
– Ambient pressure: atmosphere
– Humidity range: 20 to 95%
– Altitude: up to 1000 m

- Make sure that the cooling water fulfills the following requirements:

– Temperature: 10 - 25 °C
– Overpressure: 2 - 5 bar (relative)
– Water hardness: < 5 ° dGH

NOTE: 1° (german degree = 1° dGH) = 1,78° (french degree) = 1,25 e (english degree) = 17,9 mg/kg CaCO3 (american hardness)

– Minimum flow rate: 3 - 4 l/ min for the standard version

- Make sure that the cooling water is neutral and clean
- Make sure that the cooling water outlet is unpressurised
- Make sure that the nitrogen fulfills the following requirements:

– Overpressure: 4,0 bar
– Approximate flow rate: 25(CDA) l/ min

- Make sure that the ambient conditions correspond to the protection class of the motor (according to nameplate)
- Make sure that the vacuum pump is placed on or fastened to a horizontal surface
- Make sure that the vacuum pump is level
- Make sure that the vacuum pump is at least 1 m away from any wall to ensure good cooling
- Make sure that the vacuum pump is easily accessible and that the selected installation site fulfills the requirements for assembly/dismantling
- Make sure that no temperature-sensitive parts (for example, of plastic, wood, cardboard, paper, electronic parts) come into contact with the hot surfaces of the vacuum pump
- Make sure that the installation site or assembly area is ventilated in such a way that adequate cooling of the vacuum pump is ensured

CAUTION

The surface temperature of the vacuum pump can exceed 50°C when the vacuum pump is in operation.

Danger of burns!

- Make sure that no-one can touch the vacuum pump accidentally. If necessary, attach safeguard
- Make sure that the oil sight glasses (OSG 1, 2, 3) are easily accessible

If oil changes are to be made on site:

◆ Make sure that the oil drain and oil filler are easily accessible

Inlet connection

- Make sure that the protection that was attached to prevent penetration of particles during transport has been removed before the vacuum pump is connected to the vacuum line

CAUTION

Do not put hands into the inlet aperture.

Risk of body damage!

CAUTION

The intake of liquids or solid particles can lead to the destruction of the vacuum pump

If the sucked gas contains dusts or solid foreign bodies:

◆ Make sure that a filter or protective grating is installed at the extraction point

- Make sure that the nominal diameter of the intake line is at least equal to the diameter of the intake flange of the vacuum pump to prevent a drop in the performance of the vacuum pump in the case of a smaller cross-section
- Make sure that the vacuum pump is connected with leakproof lines

CAUTION

When the intake lines have been connected, make sure that the system does not leak. Leakages of dangerous substances must be prevented!

- Make sure that the intake lines are equipped with a shut-off device upstream of the intake flange so that the flow of sucked gas can be stopped
- Make sure that the intake lines do not exercise any force on the intake flange. Mount bellows if necessary
- The inlet flange has the following dimension:

– BC 1000 F PE: DN 100 ISO-K

In the case of long intake lines, the line cross-section should be larger than the intake flange to prevent a drop in the performance of the vacuum pump. If you have any doubts, contact your Busch representative.

Dimensional drawing BC 1000 F PE

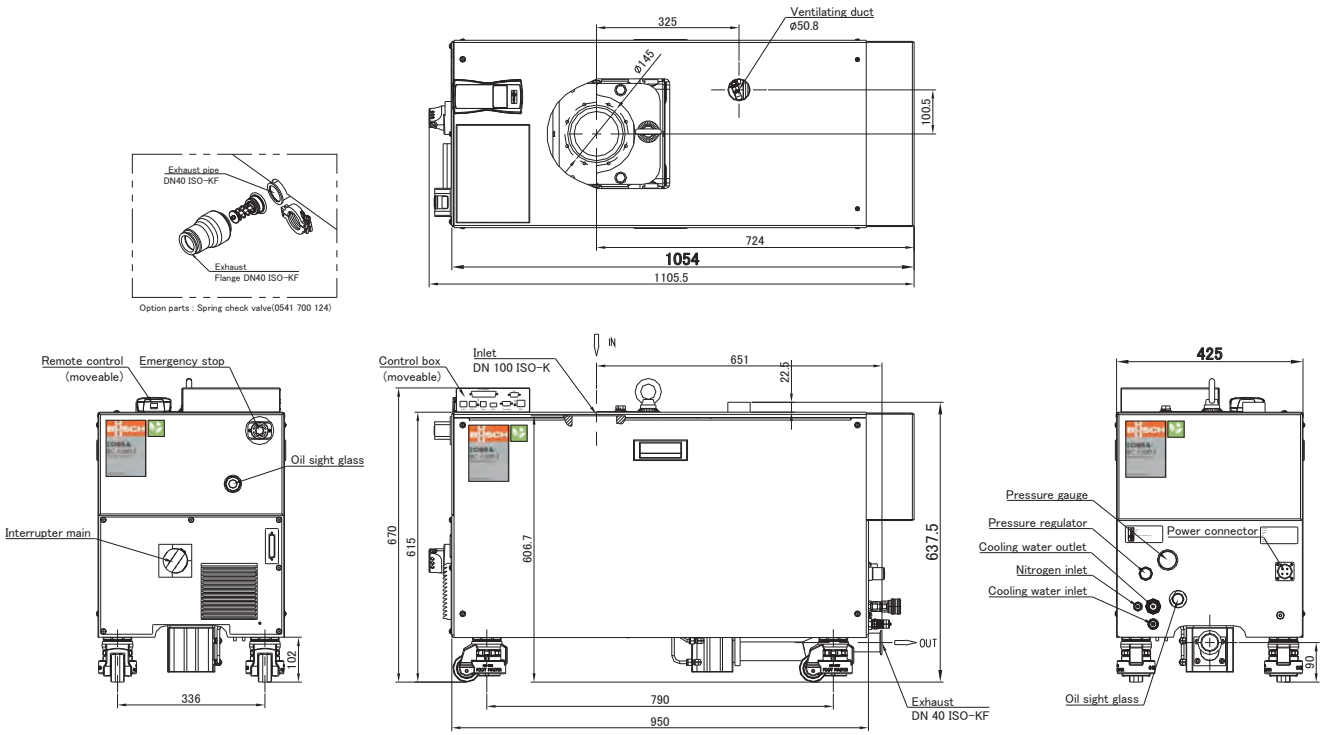

Discharge connection

CAUTION

Do not put hands into the outlet aperture.

Risk of body damage!

The following instructions for connection to the discharge only apply if the sucked gas is discharged by the vacuum pump into a suitable environment.

- Make sure that the protection that was attached to prevent penetration of particles during transport has been removed before the vacuum pump is connected to the vacuum line
- Make sure that the nominal diameter of the exhaust line is at least equal to the diameter of the exhaust flange of the vacuum pump to prevent a drop in the performance of the vacuum pump in the case of a smaller cross-section
- Make sure that the vacuum pump is connected with leakproof lines

CAUTION

When the discharge lines have been connected, make sure that the system does not leak. Leakages of dangerous substances must be prevented!

- Make sure that the discharge line is mounted in such a way that condensate cannot penetrate into the pump (siphon trap, gradient)
- Make sure that no shut-off devices are mounted in the discharge line
- Make sure that the discharge lines do not exercise any force on the discharge flange. Mount bellows if necessary
- The discharge flange has the following dimension:

– DN 40 ISO KF

In the case of long discharge lines the line cross-section should be larger than the discharge flange to prevent a drop in the performance of the vacuum pump. If you have any doubts, contact your Busch representative.

Cooling water connection

The cooling water is generally connected with a hose.

The cooling water outlet must be unpressurised.

Connection diameter: 3/8 NPT

Nitrogen connection

The nitrogen is connected with a pipe (leakproof against oxygen).

Connection diameter: 1/4 NPT

Electrical connection/ Checks

- Make sure that the regulations of the Electromagnetic Compatibility Directive 2014/30/EU as well as standard EN norms, safety directives and especially local and national regulations are observed (this is the responsibility of the manufacturer of the system into which the vacuum pump is integrated according to the Declaration of Conformity)
- Make sure that the main power supply corresponds to the data on the nameplate of the motor
- Make sure that an overload cut-out according to EN 60204-1 is provided for the motor
- Make sure that the drive of the vacuum pump is not disturbed by any electric or electromagnetic interferences. If you have any doubts, contact your Busch representative

Installation

Mounting

- Make sure that the “Necessary installation instructions” are followed
- Fasten or install the pump at its final installation site

Electrical connection

WARNING

Risk of electrocution, risk of damage.

Electrical installation must be performed by a suitably qualified electrician who knows and follows the following regulations:
- IEC 364 or CENELEC HD 384 or DIN VDE 0100,
- IEC Report 664 or DIN VDE 0110,
- VBG 4 or corresponding national regulations on accident prevention

Power wiring connection

Power wiring 4 poles	
1	Phase L1
2	Phase L2
3	Phase L3
4	Ground

Power connector on vacuum pump front side

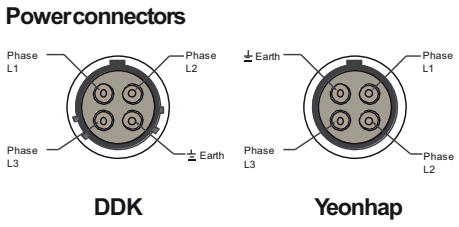

- Connect the main cable on the socket, according to the following figure

CAUTION

If the vacuum pump is operated with a motor that turns in the wrong direction, it can be destroyed, even if this is the case for only a short moment.

Make sure that the vacuum pump is connected correctly before switching it on.

- Determine rotation sense of the motor by using a measure tool or putting a rubber plate on the inlet.
- Press on the start button
- Make sure that the vacuum pump draws in
- If not, push the Emergency stop button

If the direction of rotation has to be changed:

- ◆ Exchange two of the three feeder leads

Equipment connections (with options)

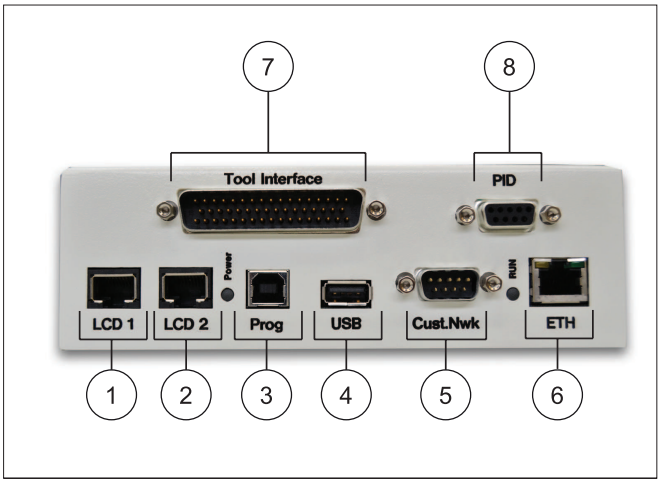

1	LCD serial wiring (RJ45), LCD1
2	LCD serial wiring (RJ45), LCD2
3	PC serial wiring (9 poles) (option)
4	USB connection
5	Customer Network, Communication modbus RTU RS 232
6	Ethernet network connection (Busch Monitoring System) (option)
7	Interface connection (50 poles) (option)
8	PID Interface (9 poles) (option)

The information concerning the use of the Busch PLC and the Busch LCD can be found in the Operation and Maintenance manual (Art.No. 0870558077).

Connection of the lines/ pipes

- Connect the intake lines
- Connect the discharge lines
- Make sure that all caps, safeguards and similar covers are mounted
- Make sure that the inlet and outlet for the cooling air are not covered or closed and that the flow of cooling air is not impaired in any way

Oil filling

The COBRA BC 1000 F PE vacuum pumps are generally dispatched with oil already in the vacuum pump. Before vacuum pump first startup, control the oil level. In the event of absence of one or the other of these lubricants, please carry out the filling (see the chapter "Oil types" for information on the recommended oils).

- Prepare the quantity of oil specified in the table "Oil quantity"

Oil filling	NW 0100 E	WY 0701 B
Oil quantity [Liter]	0,12	1,4
Oil type	Busch YLC 250 B, Art. No. 0831 000 054 (0,5 l ≅ 1 kg)	

Oil filling on vacuum pump NW 0100 E

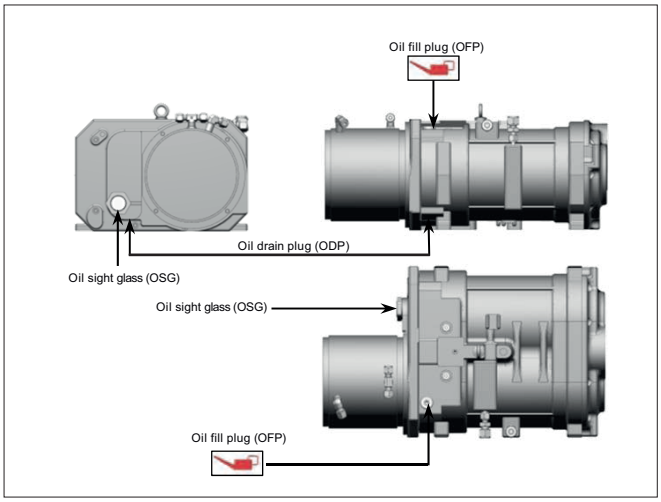

Oil filling on vacuum pump WY 0701 B

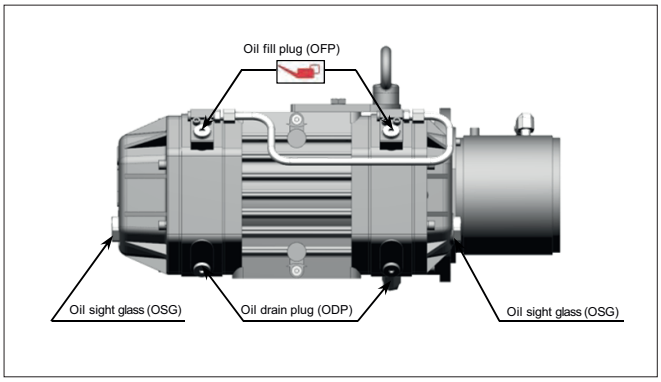

NOTE: The quantity of oil specified in the installation handbook is of informative nature only. Check the oil level with the help of the various oil sight glasses (OSG 1, 2, 3) on the vacuum pump.

CAUTION

Before you change the type of oil, make sure that the new type is compatible with the old type. If necessary, flush the vacuum pump.

- Unscrew the oil filler cap (OFP)
- Fill in oil
- Make sure that the oil level lies between the MIN and MAX markings on the oil sight glasses
- Make sure that the seals of the oil filler cap are not damaged. Replace them if necessary
- Screw on the oil filler cap hermetically tight

NOTE: It is easier to switch on the vacuum pump with cold oil when the intake line is not closed or when the intake flange is not covered by a rubber plate.

- Start the vacuum pump

If the intake line is equipped with a shut-off device:

- ◆ Close the shut-off device

If the intake line is not equipped with a shut-off device:

- ◆ Place a rubber plate on the intake flange

- Let the vacuum pump run for a few minutes
- Stop the vacuum pump and wait a few minutes
- Make sure that the oil level still lies between the MIN and MAX markings on the oil sight glasses

If the oil level is below the MIN marking:

- ◆ Fill in more oil

If the intake line is equipped with a shut-off device:

- ◆ Open the shut-off device

If the intake line is not equipped with a shut-off device:

- ◆ Remove the rubber plate from the intake flange and connect the intake line to the intake flange

CAUTION

In case of a vacuum pump filled with oil, make sure that by lifting the inclination angle of the vacuum pump do not exceed 5° from the horizontal. In case of too high inclination (>5°), risk of oil leak within the work area

- Make sure before every transport using the appropriate lifting mean that the inclination of the vacuum pump is less than 5°.

CAUTION

The vacuum pump must remain in a horizontal position when it has been filled with oil.

Checking the direct cooling

The flow of the cooling water is checked by the flowmeter CWM. The flowmeter must be connected in such a way that switching-on leads to a warning at 2l/min, when the flow drops below 1,5 l/min, the vacuum pump must be stopped.

Saving the operating parameters

As soon as the vacuum pump is working under normal conditions after being switched on:

- Measure the working current of the motor and save it as reference value for all future maintenance and repair work

Recommendations on operation

Application

WARNING

The vacuum pump is designed for use under the conditions specified here.

If these conditions are not met, there is a risk of damage to or total destruction of the vacuum pump and its components!

The vacuum pump may only be switched on under the specified conditions.

The COBRA BC vacuum pumps are designed for use in the field of microelectronics and similar industries.

They can be used to draw in gases and gas mixtures.

WARNING

When using toxic, inflammable and/or explosive gases, make sure that the system corresponds in design to applicable local and national safety regulations and that all applicable safety measures are followed.
All product-specific safety regulations must be observed.

Solid particles must not get into the vacuum pump. Procedural errors can result in the pump sucking in a certain quantity of liquid. If the pump has sucked in liquid, a short drying time is necessary at the end of the procedure.

The allowed maximum inlet gas temperature depends on the inlet pressure and the type of gas: the lower the inlet pressure (Pa), the higher the drawn gas temperature (TGas) can be.

The following indicative values for air can be considered:

– Pa > 50 mbar, TGas < 80°C
– Pa < 50 mbar, TGas < 200°C

The vacuum pump is intended for use in a potentially non-explosive environment.

As far as temperature is concerned, the pump is suitable for continuous duty at any pressure between atmosphere and ultimate pressure.

The vacuum pump is tight down to ultimate pressure.

CAUTION

The surface temperature of the vacuum pump can exceed 50 °C when the vacuum pump is in operation.

Danger of burns!

The vacuum pump may not be touched when it is in operation. If touching the pump is unavoidable, wait until the surface temperature has cooled down or wear protective gloves.

CAUTION

The intensity of the noise of the vacuum pump is higher within a certain area of the pump.

Risk of hearing damage!

Users must wear ear protection when spending a longer period of time in the vicinity of a non-insulated vacuum pump.

CAUTION

The COBRA BC 1000 F PE vacuum pumps could be delivered without oil, without cooling water.
Operation without oil will result in damage to the vacuum pump!

The vacuum pump must remain in a horizontal position when it has been filled with oil.

CAUTION

The COBRA BC 1000 F PE vacuum pumps are always delivered without oil, without cooling water.

Operation without coolants will result in damage to the vacuum pump!

CAUTION

The cooling water flow, which is checked by the flowmeter CWM, must be at least 3-4 l/min.

- Make sure that all caps, safeguards and similar covers are mounted
- Make sure that the safeguards are switched on
- Make sure that the inlet and outlet for the cooling air are not covered or closed and that the flow of cooling air is not impaired in any way
- Make sure that the system does not leak. Leakages of dangerous substances must be prevented
- Make sure that the "Necessary installation instructions" are followed and especially that adequate cooling is ensured

The following must be noted when the pump is shut down for a longer period of time:

CAUTION

If there is a risk of frost, all the cooling water must be drained out of the vacuum pump if the pump is shut down for a longer period of time!

– Drain the cooling water

  - ◆ Pull off the connections for the inlet and outlet of the cooling water
  - ◆ Drain the cooling water completely
  - ◆ If necessary, drain the cooling water with the help of compressed air to prevent any risk of frost or corrosion

Switching the vacuum pump on/ off

First start-up of the system

- Make sure that the "Necessary installation instructions" are followed

If the system is equipped with a solenoid gate valve in the cooling water circuit:

  - ◆ Open the solenoid gate valve

- Make sure that the cooling water flow is set correctly with the valve CWR:

– The cooling water circuit (*standard) is used to cool the variators, the motors, the DP and MB cylinders. The regulating valve CWR of the cooling water flow is preset at 3-4 l/min.

- Switch on the vacuum pump
- Make sure that the system does not leak

If the system is equipped with a solenoid gate valve at the intake:

CAUTION

Do not open gate valve if booster is running at full speed (90 Hz).

Use "Automatic Load Lock"mode or "External Signal" on tool interface to start/ stop boster (refer to Busch PLC manual).

Risk of primary pump damage.

  - ◆ Open the solenoid gate valve

Switching the system off

If the system is equipped with a solenoid gate valve at the intake:

  - ◆ Close the solenoid gate valve

- Switch off the vacuum pump
- Shut off the nitrogen supply
- Shut off the cooling water supply

If the system is equipped with a solenoid gate valve in the cooling water circuit:

  - ◆ Close the solenoid gate valve

- Make sure that the system is currentless

Maintenance

DANGER

In case the vacuum pump has conveyed gases that have been contaminated with foreign materials that are dangerous to health, the oil and condensates will also be contaminated.

These foreign materials can infiltrate the pores, recesses and other internal spaces of the vacuum pump.

Danger to health when the vacuum pump is dismantled.

Danger to the environment.

Always wear protective clothing when carrying out maintenance work.

Before any maintenance work, the inlet and outlet piping as well as the vacuum pump itself must be flushed with nitrogen.

CAUTION

Only authorized personnel may carry out dismantling work on the vacuum pump. Before work begins, the operator of the vacuum pump must fill in a form or a "Declaration of Contamination of Vacuum Equipment and Components" that provides information on possible dangers and appropriate measures.

If this form has not been filled in completely and signed, the vacuum pump may not be dismantled.

CAUTION

Before maintenance work is started, a safety area of at least 610 [mm] around the machine must be set up.

CAUTION

The surface temperature of the vacuum pump can exceed 50°C when the vacuum pump is in operation.

Danger of burns!

Before starting maintenance work, make sure that the vacuum pump has been switched off and that it cannot be switched on again accidentally. Follow the shutdown procedure in the section "Lock Out/ Tag Out procedure":

- stop the pump with the LCD control (press on STOP button during 10s)
- press on emergency stop button
- switch off the main circuit breaker
- switch off the customer's power supply
- switch off the water and nitrogen quick connections (inlet first, then outlet)
- put the label or warning board "Maintenance processing" on or next to the pump

CAUTION

The oil temperature can reach a value of 100°C!

Danger of burns!

- Make sure that the oil circuit has been emptied before moving the vacuum pump
- Make sure that there are no cleaning tools in the pump anymore according to local and national regulations

Before pulling off the different connections, make sure that the intake and exhaust lines of the vacuum pump correspond to atmospheric pressure

When the maintenance work has been finished, follow the procedure "Safety Lockout procedure":

- take off the label or warning board "Maintenance processing"
- check the oil level according to the chapter "Checking the oil level"
- switch on the main circuit breaker
- release the emergency stop button
- switch on the water and nitrogen quick connections (outlet first, then inlet)
- make sure that the "Necessary installation instructions" are followed
- start the pump with the LCD control (press on START button)

Maintenance program

NOTE: The maintenance intervals depend a lot on the individual operating conditions. The intervals given below should be considered initial guidelines which ought to be shortened or extended as appropriate. In particularly heavy duty operation such as high dust loads in the environment or in the process gas, it may become necessary to shorten the maintenance intervals significantly.

Weekly:

- Check the oil level and the colour of the oil (see "Checking the oil")
- Check the cooling water flow (see "Checking the cooling water")
- Check the nitrogen flow (see "Checking the nitrogen")
- Inspect the vacuum pump for oil leaks - if there are leaks, repair the vacuum pump (Busch)
- Inspect the vacuum pump for leaks of cooling water - if there are leaks, repair the vacuum pump (Busch)

Monthly:

In the case of operation in a dusty environment:

  - ◆ Make sure that the operating room is clean and free of dust; clean if necessary

- Make sure that the vacuum pump has been switched off and that it cannot be switched on again accidentally
- Check the electrical connections
- Carry out a visual inspection of the vacuum pump

Yearly:

- Make sure that the vacuum pump has been switched off and that it cannot be switched on again accidentally

If the intake is equipped with a sieve:

  - ◆ Check the sieve at the intake and clean if necessary

- Check the measuring and safety equipment for working order

If the discharge is equipped with a silencer:

  - ◆ Bleed the condensation of the silencer through the purge system

If the discharge is equipped with a leak-protection non-return valve:

  - ◆ Clean the leak-protection non-return valve

- Check the ventilator filter (RF), clean if necessary

If the cooling water line is equipped with a filter:

  - ◆ Check the filter and clean or replace if necessary

- Check the seals and replace if necessary
- Check the intake and discharge lines and clean or replace if necessary

Every 16 000 hours of operation, at the latest after 4 years:

- Drain the oil (see "Draining the oil")
- A main inspection of the vacuum pump (Busch)

Lock Out/ Tag Out procedure

- Stop the pump with the LCD control (press on STOP button during 10s)
- Press on emergency stop button
- Switch off the main circuit breaker
- Switch off the customer's power supply
- Switch off the water and nitrogen quick connections (inlet first, then outlet)
- Put the label or warning board "Maintenance processing" on or next to the pump

Safety Lockout procedure

- Take off the label or warning board “Maintenance processing”
- Check the oil level according to the chapter “Checking the oil level”
- Switch on the main circuit breaker
- Release the emergency stop button
- Switch on the water and nitrogen quick connections (outlet first, then inlet)
- Make sure that the “Necessary installation instructions” are followed
- Start the pump with the LCD control (press on START button)

Checking the oil

Checking the oil level

- Make sure that the vacuum pump has been switched off and that it cannot be switched on again accidentally
- Indication of the oil level on the various oil sight glasses

If the oil level does not reach the MIN marking:

◆ Top up with oil (see “Refilling oil”)

If the oil level exceeds the MAX marking:

◆ Check the condensate drain

- Drain the oil (see “Draining the oil”)

Refilling oil

NOTE: Oil does not normally have to be refilled outside the recommended oil change intervals. A drop in the oil level indicates a fault (see "Alarms and warnings" -> Busch PLC and Busch LCD).

CAUTION

Only fill in oil through the oil filler opening.

CAUTION

Danger of burns when the oil filler cap is open.

Danger of injuries when the oil filler cap is not screwed on properly.

Only unscrew the oil filler cap when the vacuum pump has been switched off.

The vacuum pump may only be switched on when the oil filler cap is properly closed and tight.

We recommend submitting the pump to a leakage rate test in order to ensure the pump is leak tight.

- Make sure that the vacuum pump has been switched off and that it cannot be switched on again accidentally
- Unscrew the oil filler cap (OFP)
- Fill in oil up to the middle of the oil sight glass
- Make sure that the oil level lies between the MIN and MAX markings on the oil sight glasses
- Make sure that the seals of the filler cap are not damaged and that they sit properly. Replace them if necessary
- Screw on the filler cap again

Checking the colour of the oil

NOTE: The oil must be clear and transparent. A permanent milky colour is an indication for contamination by foreign bodies. A dark colour is an indication for oil that has been chemically altered or contaminated by foreign bodies.

WARNING

Dark colored oil may indicate a hazardous pump condition which could cause personal injury.

If dark oil similar to the example shown is observed, you have to contact the Busch Customer Service without delay.

Oil change

DANGER

If the vacuum pump has pumped gases that were contaminated with foreign bodies that are hazardous to health, the oil is also contaminated with these foreign bodies.

There is a health hazard when changing contaminated oil.

There is also a danger to the environment.

Wear protective clothing when replacing contaminated oil.

Contaminated oil must be treated specially and must be disposed of according to applicable regulations.

Draining used oil

NOTE: After switching off the vacuum pump at normal operating temperature wait no more than 20 minutes before the oil is drained.

- Make sure that the vacuum pump is switched off and cannot accidentally be switched on again
- Make sure that the vacuum pump is vented to atmospheric pressure
- Put a drain tray underneath the oil drain plugs (ODP)
- Remove the oil drain plugs (ODP)
- Carefully remove the drain plugs
- Drain the oil
- Because of wear and tear on the seals replace the current drain plugs with new ones

When the oil flow has stopped:

◆ Close the oil drain plugs (ODP)

- Switch on the vacuum pump for a few seconds
- Make sure that the vacuum pump is switched off and cannot accidentally be switched on again
- Remove the oil drain plugs again and drain any remaining oil
- Check that no metal swarf sticks to the magnet of the drain plug, clean if necessary
- Refit the oil drain plugs and tighten up
- Dispose of the used oil in compliance with applicable regulations

CAUTION

Because the ends of the drain plugs are magnetic, metal swarf can stick to them. Always clean away this swarf when removing the drain plugs.

Because of wear and tear of the seals, it is recommended to replace the drain plugs whenever the oil is changed.

Filling in new oil

- Prepare the quantity of oil needed (see "Oil type/ quantity")

WARNING

The use of chemically contaminated or polluted oil can lead to hazardous pump conditions which could cause personal injury.

NOTE: The quantity of oil specified in the installation handbook is of informative nature only. Check the oil level with the help of the various oil sight glasses on the vacuum pump.

- Make sure that the drain plugs have been fitted properly and that they do not leak

CAUTION

Only fill in oil through the oil filler opening.

- Unscrew the oil filler cap (OFP)
- Fill in oil up to the middle of the oil sight glass
- Make sure that the oil level lies between the MIN and MAX markings on the oil sight glasses
- Make sure that the seals of the filler cap are not damaged and that they sit properly. Replace them if necessary
- Screw on the filler cap again

Checking the cooling water

Checking the cooling water flow

- Check the cooling water flow regularly

If the flow drops, check for leaks

- ◆ Make sure that the specifications of the cooling water are followed

Checking the nitrogen

Checking the nitrogen flow

- Check the nitrogen flow regularly

If the flow drops, check for leaks

- ◆ Make sure that the specifications of the nitrogen are followed

Checking the current consumption

- Check the current intensity of the motor

An increased intensity is an indication for a fault (see "Troubleshooting")

Checking the silencer (accessory)

- Make sure that the condensate does not collect at the exhaust of the vacuum pump
- Drain the condensate and collect it in a container
- Dispose of the condensate according to applicable environmental protection regulations
- Check the silencer regularly and clean it if necessary

Checking the leak-protection non-return valve (accessory)

- Check the leak-protection non-return valve regularly and clean it if necessary

CAUTION

Wear protective clothing when carrying out maintenance work on the silencer and leak-protection non-return valve.

There could still be residues of contamination.

Overhaul

CAUTION

Inappropriate maintenance work on the vacuum pump can damage the pump.

Danger of explosion!

If requirements are not met, the vacuum pump may not be switched on!

Should work exceed the dismantling work described in this handbook, it may only be carried out by authorized persons.

DANGER

In case the vacuum pump has conveyed gases that have been contaminated with foreign materials that are dangerous to health, the oil and condensates will also be contaminated.

These foreign materials can infiltrate the pores, recesses and other internal spaces of the vacuum pump.

Danger to health when the vacuum pump is dismantled.

Danger to the environment.

Prior to shipping, the vacuum pump must imperatively be decontaminated and the degree of contamination must be documented in a declaration of decontamination ("Declaration of Contamination of Vacuum Equipment and Components"), which can be downloaded from www.buschvacuum.com.

Busch service will only accept vacuum pumps that come with a completely filled in and legally binding signed form.

Removal from service

Temporary removal from service

Before disconnecting the intake and exhaust lines and switching off the cooling water and nitrogen lines, make sure that the lines have adjusted to atmospheric pressure

Recommissioning

- Make sure that the various protective elements, stoppers or adhesive tapes have been removed
- Switch on the vacuum pump by following the procedure described in the chapter "Installation and Commissioning"

Dismantling and Disposal of the vacuum pump

DANGER

In case the vacuum pump has conveyed gases that have been contaminated with harmful foreign material which are harmful to health, the oil and the condensates will also be contaminated with harmful foreign material.

These foreign materials can infiltrate the pores, recesses and other internal spaces of the vacuum pump.

Danger to health during dismantling of the vacuum pump.

Danger to the environment.

During dismantling of the vacuum pump protective equipment and clothing must be worn.

Prior to shipping, the vacuum pump must imperatively be decontaminated and the degree of contamination must be documented in a declaration of decontamination ("Declaration of Decontamination"), which can be downloaded from www.buschvacuum.com.

Used oil and condensates must be disposed of separately in compliance with applicable environmental regulations.

When the product has reached the end of its lifetime:

– decontaminate the vacuum pump

CAUTION

Only authorized personnel may carry out dismantling work on the vacuum pump. Before work begins, the operator of the vacuum pump must fill in a form or a "Declaration of Decontamination" that provides information on possible dangers and appropriate measures.

If this form has not been filled in completely and signed, the vacuum pump may not be dismantled.

– drain the oil
  - ◆ dispose of the oil according to local environmental protection regulations
– begin dismantling the vacuum pump

CAUTION

During dismantling of the vacuum pump protective equipment and clothing must be worn

  - ◆ dispose of the vacuum pump as scrap metal
– dispose of the individual parts of the machine according to local regulations

A lithium battery is present inside the PLC:

– eliminate the lithium battery according to local and national regulations in place, relating to environment

Oil type/ quantity

Oil type

- Make sure that the oil type corresponds to specification:

– Busch YLC 250 B, Art. No. 0831 000 054 (0,5 l ≅ 1 kg)

WARNING

The use of chemically contaminated or polluted oil can lead to hazardous pump conditions which could cause personal injury.

Oil quantity

The quantity of oil specified in the following table is of informative nature only. Check the oil level with the help of the various oil sight glasses on the vacuum pump.

Pump type	DP pump (liters)	MB pump motor side (n°2 - liters)	MB pump gear side (n°1 - liters)
BC 1000 F PE	0,12 l	0,6 l	0,8 l

Technical data

Technical data				BC 1000 F PE
Effective suction capacity			m^3/h (cfm)	955 (562)
Ultimate pressure			Torr mbar	$7{,}0 \times 10^{-4}$ 1×10^{-3}
Nominal motor rating	DP	50 Hz	kW	1,8
Nominal motor rating	MB	90 Hz	kW	2.9
Electric power capacity at ultimate pressure			kW kW idle mode	1,5 0,4
Nominal motor speed	DP		min^{-1}	3600
Nominal motor speed	MB		min^{-1}	5400
Noise level (EN ISO 2151)			dB(A)	< 62
Ambient temperature			°C °F	0 - 40 32 - 104
Maximale counter pressure	Discharge		bar	0.2
Cooling water requirement			l/ min	min. 3.0 - 4.0
Cooling water pressure			bar/ ΔP	2 ... 5
Cooling water temperature			°C	10 - 25
Nitrogen requirement			l/ min	25 (CDA)
Nitrogen overpressure			bar	4,0
Weight			kg	310

EU-Declaration of Conformity

This Declaration of Conformity and the CE-mark affixed to the nameplate are valid for the machine within the Busch scope of delivery. This declaration of Conformity is issued under the sole responsibility of the manufacturer. When this machine is integrated into a superordinate machinery the manufacturer of the superordinate machinery (this can be the operating company, too) must conduct the conformity assessment process for the superordinate machine or plant, issue the Declaration of Conformity for it and affix the CE-mark.

The manufacturer:

Busch Manufacturing Korea, Ltd.
189-51, Soicheon-ro, Majang-myun
Icheon-si, Gyunggi-do, 467-813
Republic of Korea

declare that the machine(s) **BC 1000 F Premium Efficiency**

with a serial number from **K1701...** to **K1852...**

has (have) been manufactured in accordance with the European Directives:

- "Machinery" 2006/42/EC
- "Electromagnetic Compatibility" 2014/30/EU
- "RoHS" 2011/65/EU, restriction of the use of certain hazardous substances in electrical and electronic equipment

and following the standards:

Standard	Title of the standard
EN ISO 12100:2010	Safety of machinery - Basic concepts, general principles of design
EN ISO 13857:2008	Safety of machinery - Safety distances to prevent hazard zones being reached by the upper and lower limbs
EN 1012-1:2010 EN 1012-2:1996 + A1:2009	Compressors and vacuum pumps - Safety requirements - Part 1 and 2
EN ISO 2151:2008	Acoustics - Noise test code for compressors and vacuum pumps - Engineering method (grade 2)
EN 60204-1:2006	Safety of machinery - Electrical equipment of machines - Part 1: General requirements
EN 61000-6-2:2005	Electromagnetic compatibility (EMC) – Generic standards. Immunity for industrial environments; Part 1 and 3
EN 61000-6-4:2007 + A1:2011	Electromagnetic compatibility (EMC) – Generic standards. Emission standard for industrial environments
EN ISO 13849-1:2015 [1]	Safety of machinery - Safety-related parts of control systems - Part 1: General principles for design and 2

Person authorised to compile the technical file:

Gerd Rohweder
Busch Dienste GmbH
Schauinslandstr. 1
DE-79689 Maulburg

Icheon-si, 18.05.2016

Seung-hwa Yoo, General Director

[1] In case control systems are integrated.

Note

Note

Busch – All over the World in Industry

www.buschvacuum.com

Argentina

Busch Argentina S.R.L.
Santo Domingo 3076
C1293AGN-Capital Federal
Buenos Aires
Phone: +54 11 4302 8183
Fax: +54 11 4301 0896
e-mail: info@busch-vacuum.com.ar

Australia

Busch Australia Pty. Ltd.
30 Lakeside Drive
Broadmeadows, Vic. 3047
Phone: +61 3 93 55 06 00
Fax: +61 3 93 55 06 99
e-mail: sales@busch.com.au

Austria

Busch Austria GmbH
Industriepark Nord
2100 Korneuburg
Phone: +43 2262 / 756 65-0
Fax: +43 2262 / 756 65-20
e-mail: busch@busch.at

Belgium

Busch N.V.
Kruinstraat 7
9160 Lokeren
Phone: +32 9 / 348 47 22
Fax: +32 9 / 348 65 35
e-mail: info@busch.be

Brazil

Busch do Brasil Ltda.
Estrada Municipal Santo Gastaldi, 160
13240-000 Jarinu-SP
Phone: +55 11 4016 1400
Fax: +55 11 4016 5399
e-mail: vendas@buschdobrasil.com.br

Canada

Busch Vacuum Technics Inc.
1740, Lionel Bertrand
Boisbriand, Québec J7H 1N7
Phone: +1 450 435 6899
Fax: +1 450 430 5132
e-mail: info@busch.ca

Chile

Busch Chile S. A.
Calle El Roble N° 375-G
Lampa - Santiago
Phone: +56 2 3765136
Fax: +56 2 7387092
e-mail: info@busch.cl

China

Busch Vacuum (Shanghai) Co., Ltd
No.5, Lane 195 Xipu Road
Songjiang Industrial Estate East New Zone
Shanghai 201611 PRC
Phone: +86 (0)21 67600800
Fax: +86 (0)21 67600700
e-mail: busch@busch-china.com

Czech Republic

Busch Vakuum s.r.o.
Jugoslávská 868/4a
613 00 Brno
Phone: +420 530 504 410
Fax: +420 530 504 420
e-mail: info@buschpumps.cz

Denmark

Busch Vakuumteknik A/S
Parallelvej 11
8680 Ry
Phone: +45 87 88 07 77
Fax: +45 87 88 07 88
e-mail: info@busch.dk

Finland

Busch Vakuumteknik Oy
Sinikellontie 4
01300 Vantaa
Phone: +358 9 774 60 60
Fax: +358 9 774 60 666
e-mail: info@busch.fi

France

Busch France S.A.S.
16, Rue du Bois Chaland
91090 Lisses
Phone: +33 16989 8989
Fax: +33 16989 8958
e-mail: busch@busch.fr

Germany

Dr.-Ing. K. Busch GmbH
Schauinslandstrasse 1
79689 Maulburg
Phone: +49 7622 681-0
Fax: +49 7622 6 5484
e-mail: info@busch.de

Hungary

Busch Vacuum Kft.
Gyári út 23.
2310 Szigetszentmiklós
Phone: +36 24 887 308
Fax: +36 24 887 309
e-mail: busch@buschvacuum.hu

India

Busch Vacuum India Pvt Ltd.
103, Sector 5
IMT Manesar
Gurgaon
Haryana - 122 050
Phone: +91 124 4050091
Fax: +91 124 2292103
e-mail: sales@buschindia.com

Ireland

Busch Ireland Ltd.
A10-11 Howth Junction Business Centre
Kilbarrack, Dublin 5
Phone: +353 1 832 1466
Fax: +353 1 832 1470
e-mail: sales@busch.ie

Israel

Busch Israel Ltd.
1 Mevo Sivan Street
Qiryat Gat 82022, Israel
Phone: +972 (0)8 6810485
Fax +972 (0)8 6810486
e-mail: service_sales@busch.co.il

Italy

Busch Italia S.r.l.
Via Ettore Majorana, 16
20834 Nova Milanese
Phone: +39 0362 370 91
Fax: +39 0362 370 999
e-mail: info@busch.it

Japan

Nippon Busch K.K.
1-23-33, Megumigaoka
Hiratsuka City, Kanagawa
Japan 259-1220
Phone: +81 463-50-4000
Fax: +81 463-50-4004
e-mail: info@busch.co.jp

Korea

Busch Manufacturing Korea, Ltd.
189-51, Soicheon-ro, Majang-myun,
Icheon-si, Gyunggi-do, 467-813,
Republic of Korea
Phone: +82 31 645 2700
Fax: +82 31 631 2898
e-mail: busch@busch.co.kr

Malaysia

Busch Malaysia Sdn Bhd.
4&6, Jalan Taboh 33/22, Seksyen 33
Shah Alam Technology Park
40400 Shah Alam
Selangor Darul Ehsan
Phone: +60 3 5122 2128
Fax +60 3 5122 2108
e-mail: busch@busch.com.my

Mexico

Busch Vacuum Mexico S. de R.L. de C.V.
Tlaquepaque 4865, Los Altos
Monterrey, Nuevo Leon
Mexico 64370
Phone: +52 81 8311-1385
Fax: +52 81 8311-1386
e-mail: info@busch.com.mx

Netherlands

Busch B.V.
Pompmolenlaan 2
3447 GK Woerden
Phone: +31 348-462300
Fax: +31 348-422939
e-mail: info@busch.nl

New Zealand

Busch New Zealand Ltd.
Unit D, 41 Arrenway Drive
Albany, Auckland 1330
Phone: +64 9 414 7782
Fax: +64 9 414 7783
e-mail: sales@busch.co.nz

Norway

Busch Vakuumteknikk AS
Hestehagen 2
1440 Drøbak
Phone: +47 64 98 98 50
Fax: +47 64 93 66 21
e-mail: busch@busch.no

Poland

Busch Polska Sp. z o.o.
Ul. Chopina 27

87-800 Wloclawek
Phone: +48 54 2315400
Fax: +48 54 2327076
e-mail: busch@busch.com.pl

Portugal

Busch Ibérica S.A., Sucursal em Portugal
Marco da Raposa - Z.I. EN 1 Norte
3750-753 Raso de Travassô - Agueda
Aveiro, Portugal
Phone: +351 234 648 070
Fax: +351 234 648 068
e-mail: geral@buschib.pt

Russia

Busch Vacuum Russia OOO
Kotlyakovskaya str., 6/9
115201 Moscow
Phone: +7 495 6486726
Fax: +7 495 6486724
e-mail: info@busch.ru

Singapore

Busch Vacuum Singapore Pte. Ltd.
77A Joo Koon Circle
Singapore 629098
Phone: +65 6488 0866
Fax: +65 6288 0877
e-mail: busch@busch.com.sg

South Africa

Busch Vacuum South Africa (Pty) Ltd.
87 Mimetes Road
Denver
Johannesburg
Phone: +27 11 856 0650/6
Fax: +27 11 856 0625
e-mail: joe.jagger@busch.co.za

Spain

Busch Ibérica S.A.
Pol. Ind. Coll de la Manya
C/ Jaume Ferran, 6-8
08403 Granollers
Phone: +34 93 861 61 60
Fax: +34 93 840 91 56
e-mail: busch@buschib.es

Sweden

Busch Vakuumteknik AB
Bråta Industriområde
435 33 Mölnlycke
Phone: +46 31-338 00 80
Fax: +46 31-338 00 89
e-mail: info@busch.se

Switzerland

Busch AG
Waldweg 22
4312 Magden
Phone: +41 61 / 845 90 90
Fax: +41 61 / 845 90 99
e-mail: info@buschag.ch

Taiwan

Busch Taiwan Corporation
1F. No. 69, Sec. 3, Beishen Road
Shenkeng Township,
Taipei County 222
Phone: +886 2 2662 0775
Fax: +886 2 2662 0796
e-mail: info@busch.com.tw

Thailand

Busch Vacuum (Thailand) Co., Ltd.
29/10 Moo 7, Soi Poolchareon,
Bangna-Trad Road,
Bangchalong, Bangplee
Samutprakarn 10540
Phone: +66 2 3370360-2
Fax: +66 2 3370363
e-mail: info@busch.co.th

Turkey

VAKUTEK
Emlak Kredi Ishani No: 179
34672 Üsküdar-Istanbul
Phone: +90 216 310 0573
Fax: +90 216 343 5126
e-mail: vakutek@ttnet.net.tr

United Arab Emirates

Busch Vacuum FZE
A-3/71, Sharjah Airport International Free zone (SAIF-Zone),
P.B.No: 121855, Sharjah
Phone: +971 06 5529 174
Fax: +971 6 5528 653
e-mail: abhishek.sharma@busch.ae

United Kingdom

Busch (UK) Ltd
Hortonwood 30
Telford Shropshire TF1 7YB
Phone: +44 1952 677 432
Fax: +44 1952 677 423
e-mail: sales@busch.co.uk

USA

Busch LLC
516-B Viking Drive
Virginia Beach, VA 23452
Phone: +1 757 463-7800
Fax: +1 757 463 7407
e-mail: marketing@buschusa.com